TOP VIEW

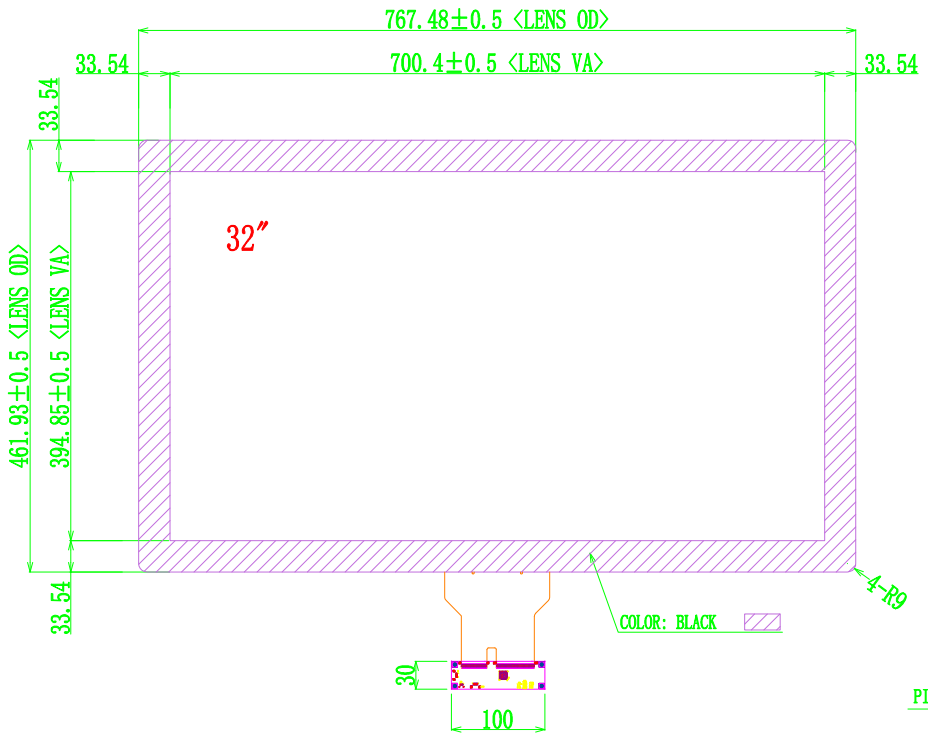

SIDE VIEW

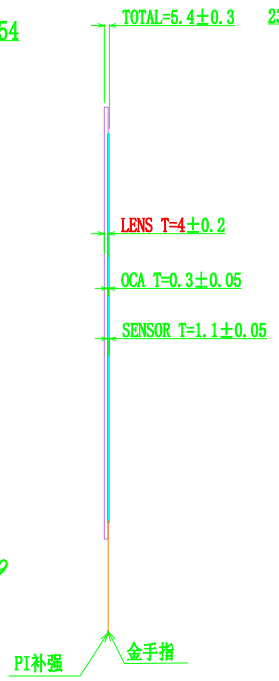

BOTTOM VIEW

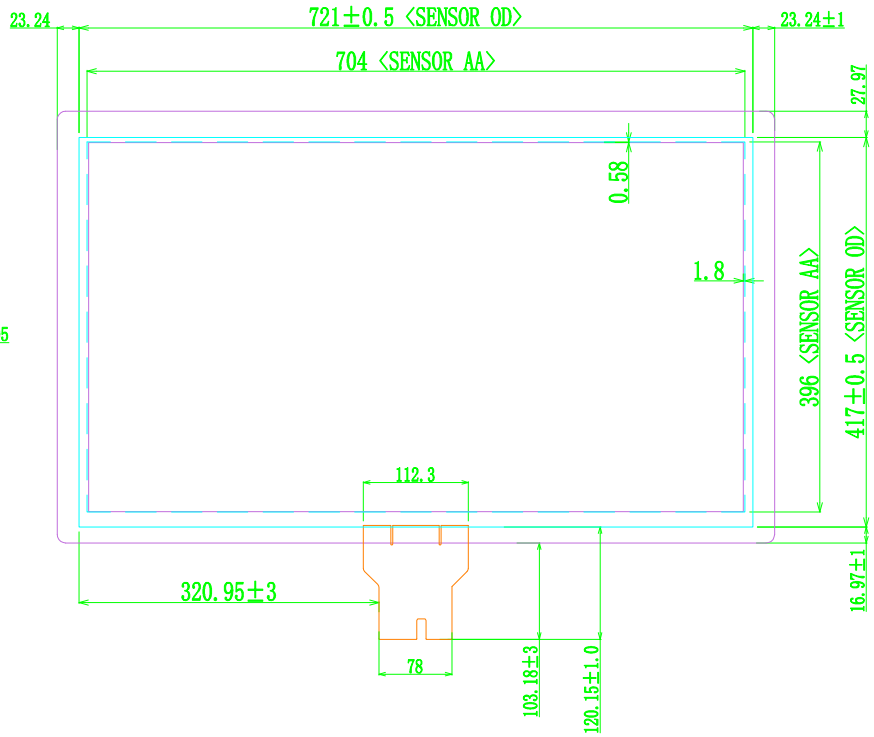

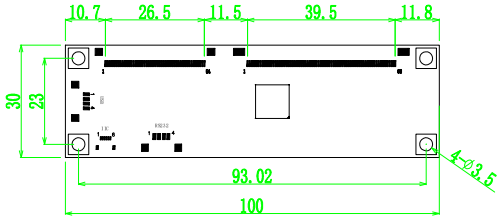

CONTROLLER
SC 4:1

Property	Requirement
Type	Glass to Glass
IC	COB ILITEK2312C3P3V1
Surface Hardness	≥6H
Light Transmission	≥83%
Operation Temperature	-20℃~70℃
Storage Temperature	-30℃~80℃

USB PIN ASSIGNMENT

1	VBUS
2	D-
3	D+
4	GND

IIC PIN ASSIGNMENT

1	VDD
2	GND
3	SDA
4	SCL
5	INTB
6	RST

RS232 PIN ASSIGNMENT

1	VBUS
2	RXD
3	TXD
4	GND

SINOTECTRONICS INC.

TITLE: 产品编号	SNT-ITO-TPB-32-ILI-R1				
Designed By: 设 计		Customerid: 客户编号		View: 投影方式	
Checked By: 审 核		Unit: 单 位	mm		
Approved By: 批 准		Date: 日 期	20200425	Scale: 比 例	1:1